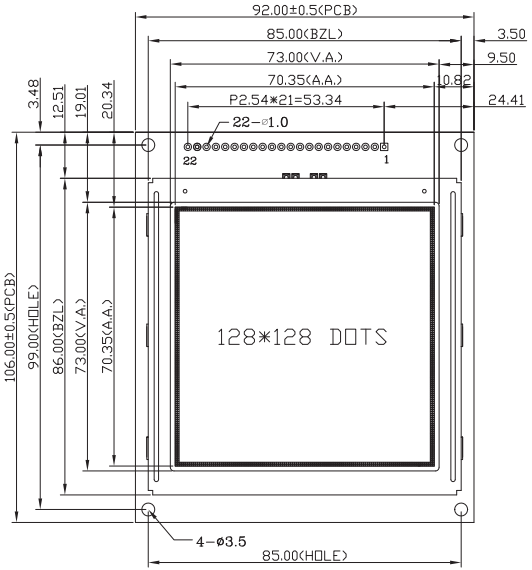

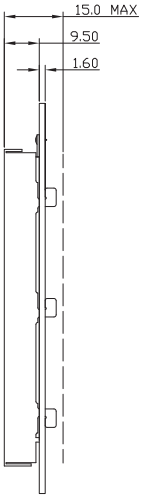

22	K
21	A
20	HALT
19	VEE
18	FS
17	DB7
16	DB6
15	DB5
14	DB4
13	DB3
12	DB2
11	DB1
10	DB0
9	RST
8	C/D
7	CE
6	RD
5	WR
4	VD
3	VDD
2	GND
1	FGND
PIN NO.	SYMBOL

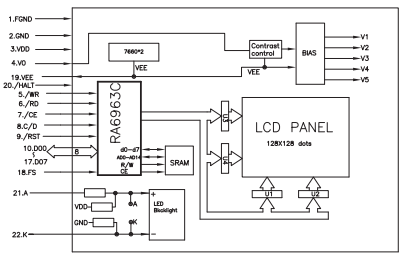

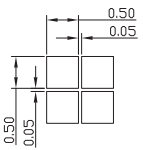

DISPLAY PATTERN