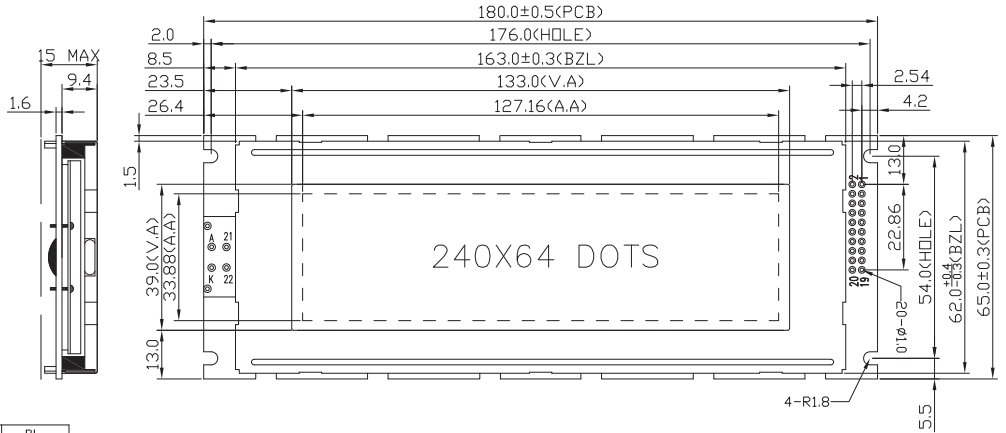
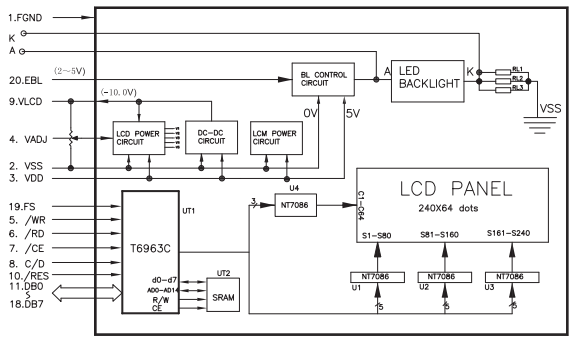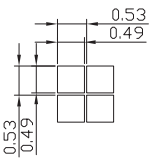
PIN NO.	SYMBOL
22	BL-
21	BL+
20	EBL
19	FS
18	DB7
17	DB6
16	DB5
15	DB4
14	DB3
13	DB2
12	DB1
11	DB0
10	/RES
9	VLCD
8	C/D
7	/CE
6	/RD
5	/WR
4	VADJ
3	VDD
2	VSS
1	FGND